Desart Photo Booth
Instruction Guide

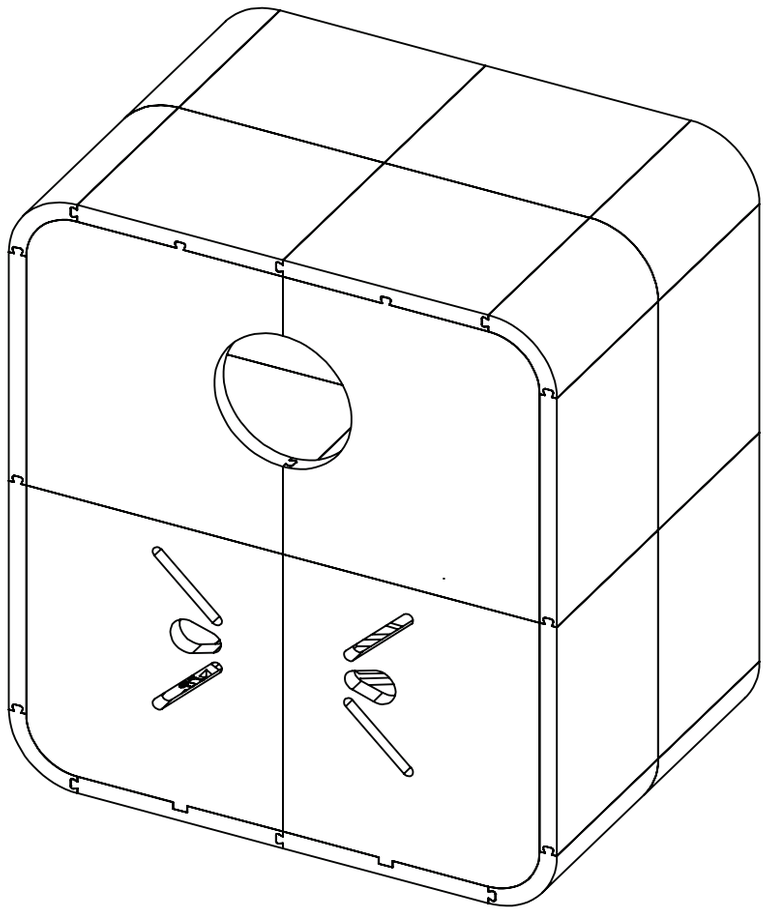

Photobooth exploded view

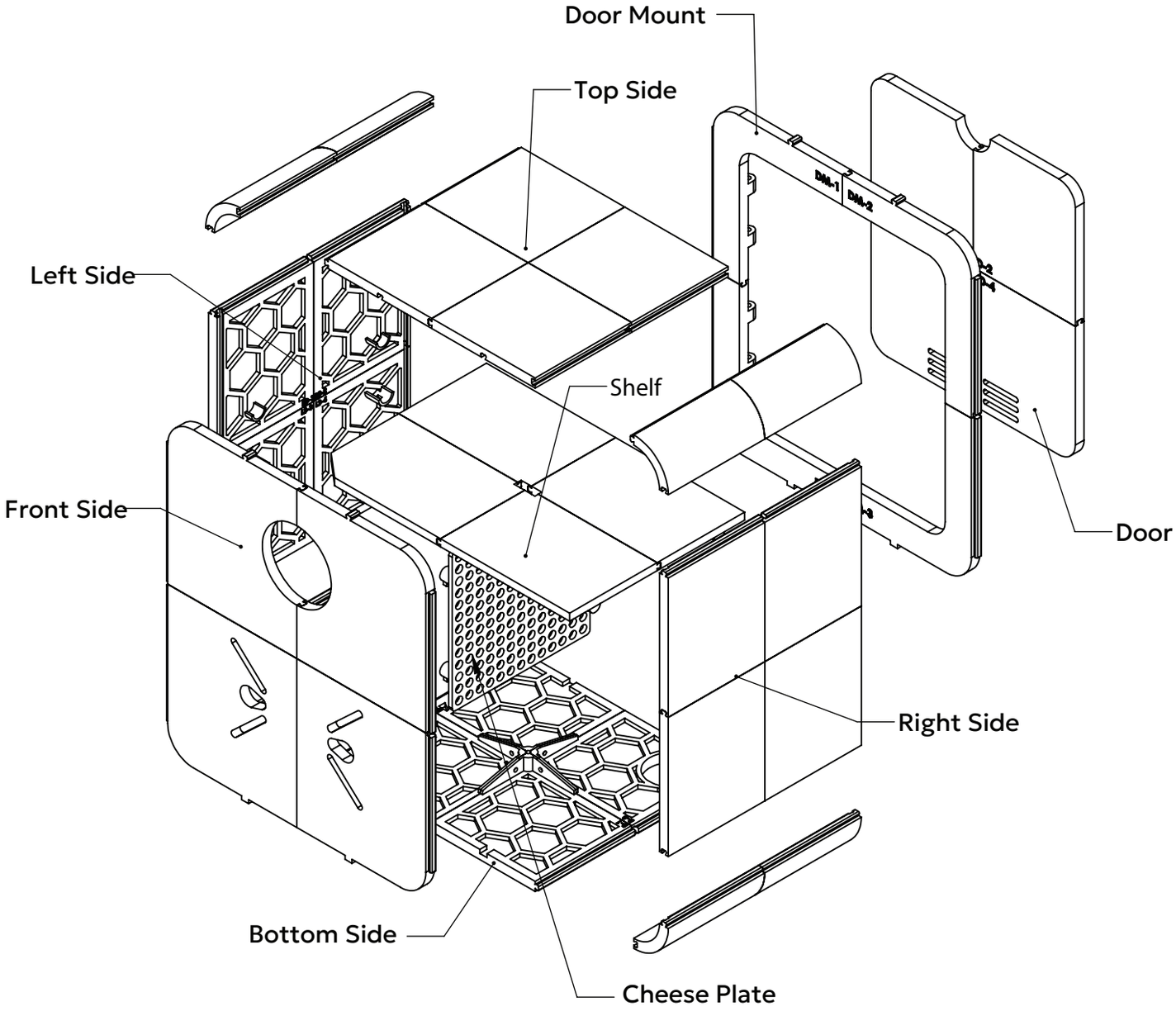

Front Side

1

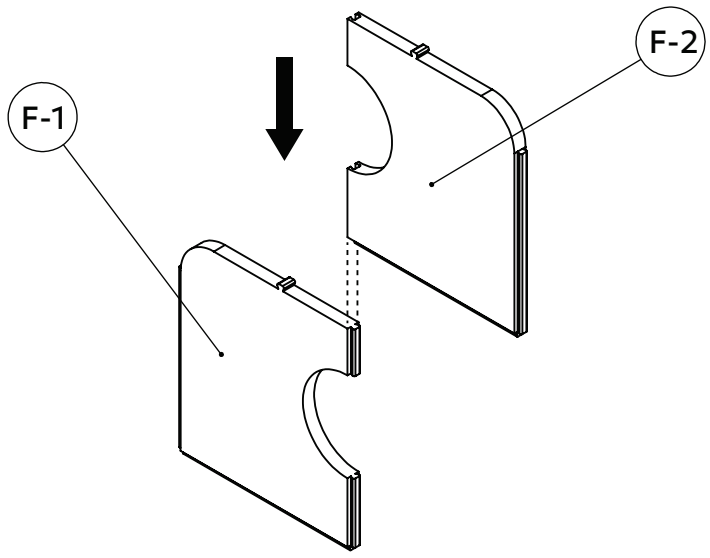

2

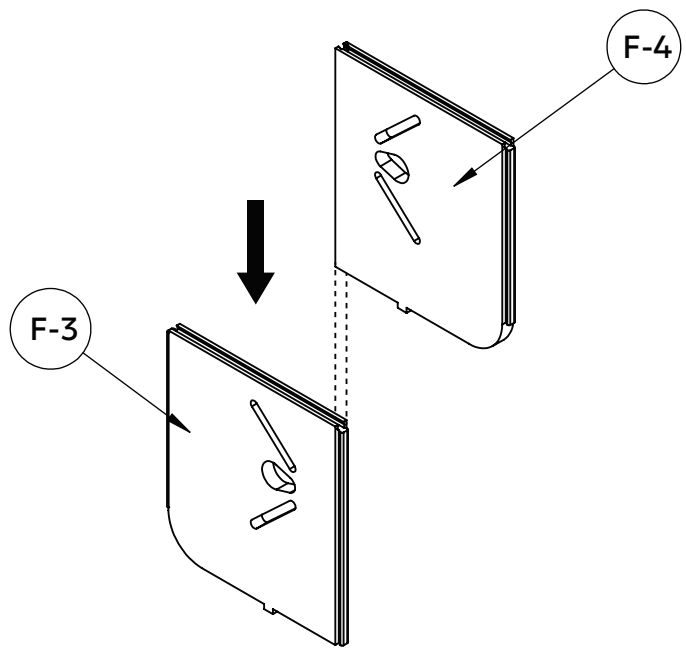

3

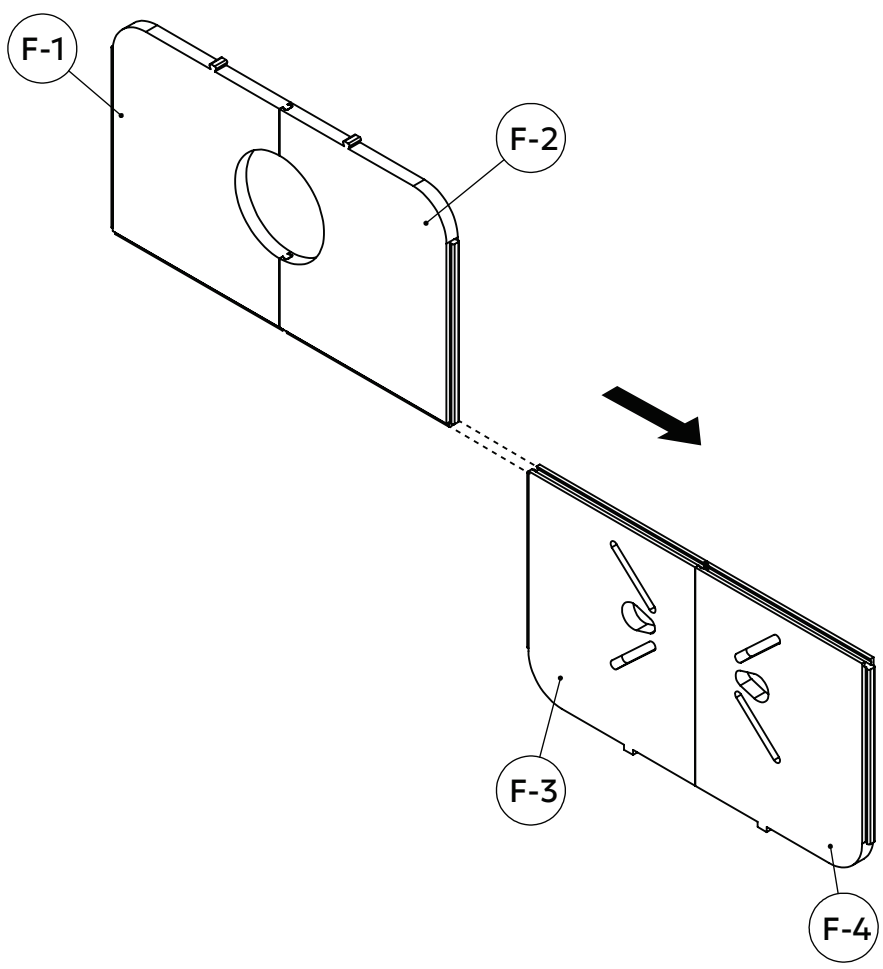

Bottom Side

4

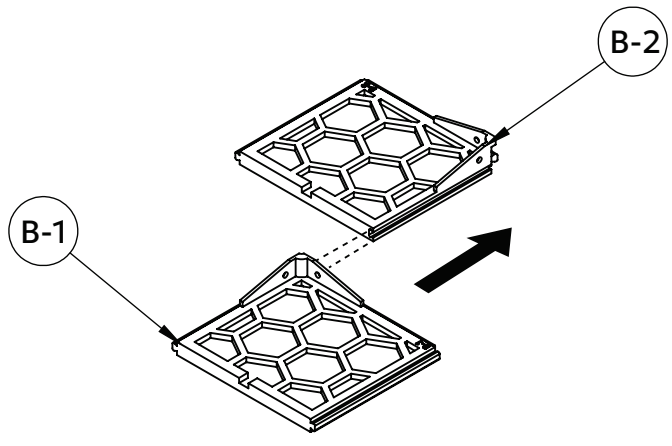

5

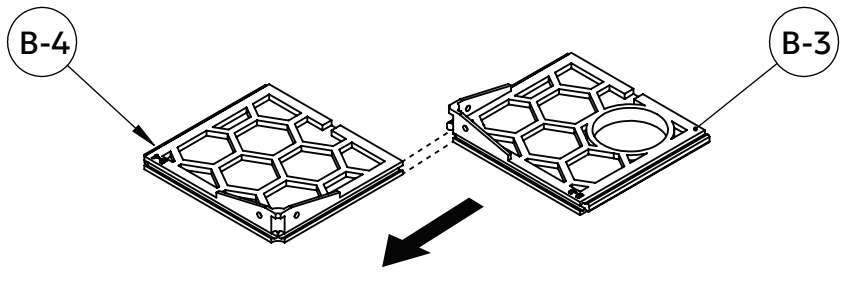

6

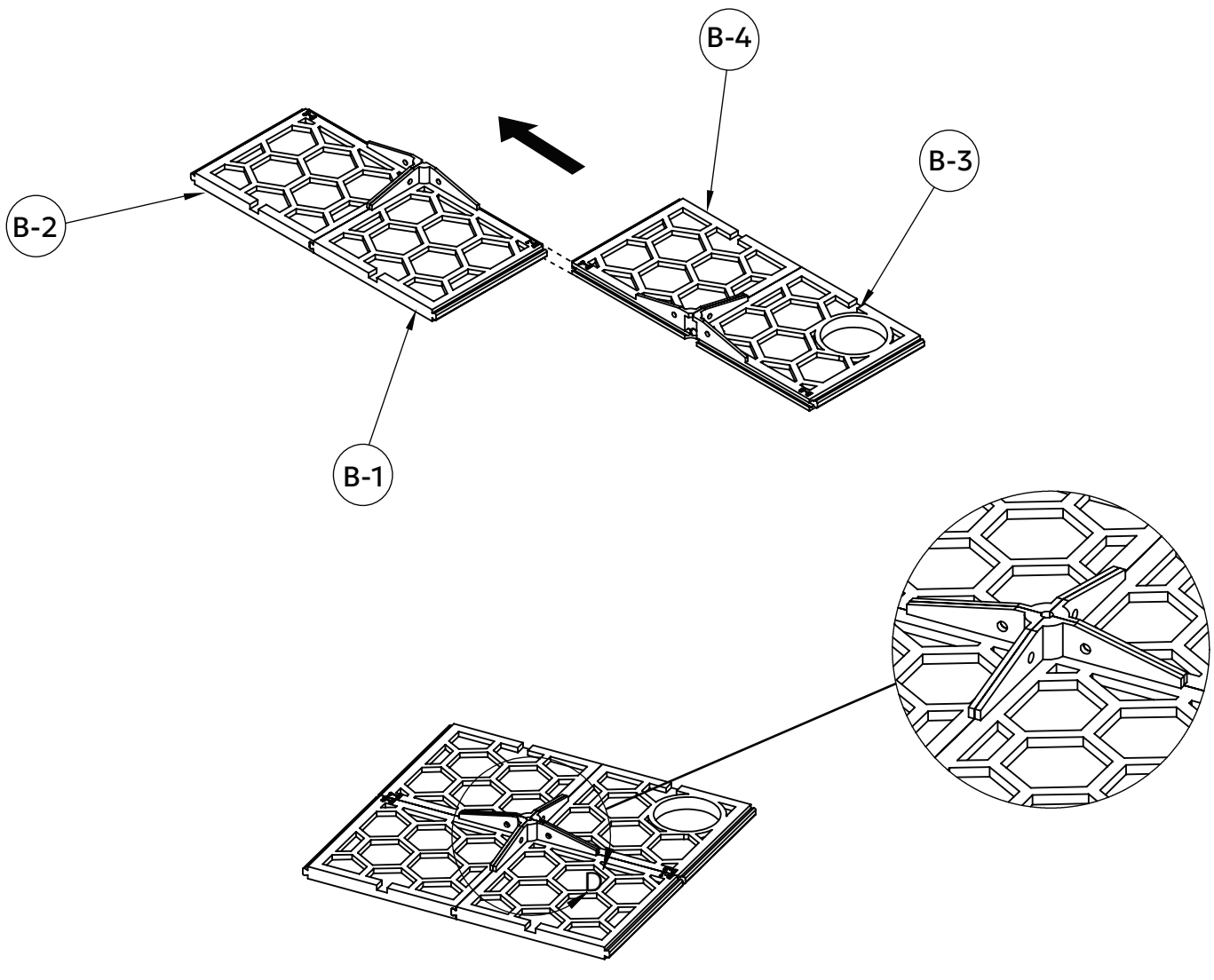

Top Side

7

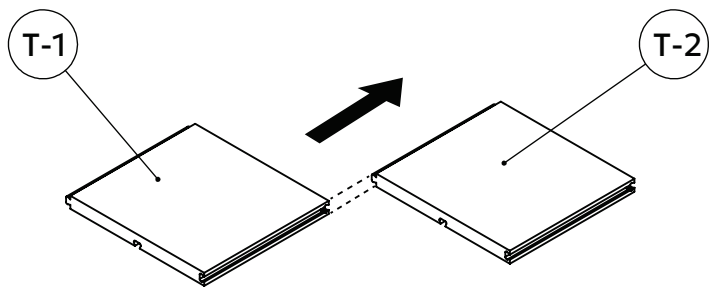

8

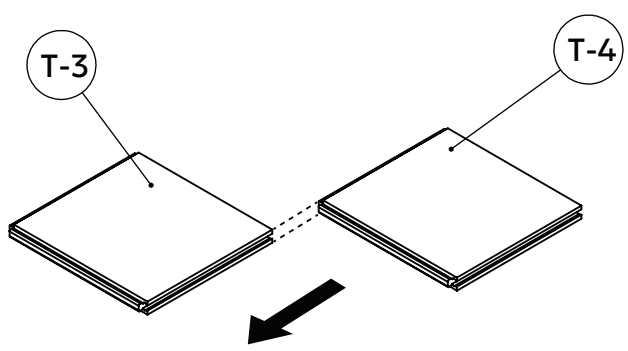

9

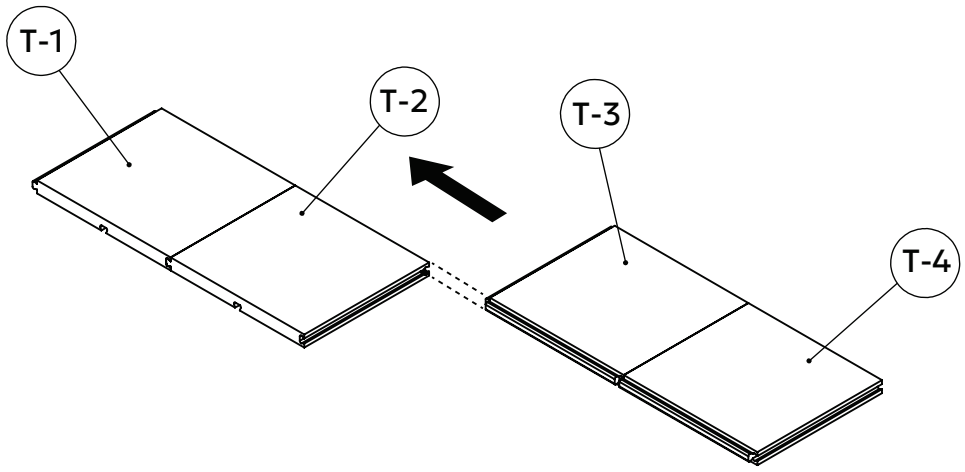

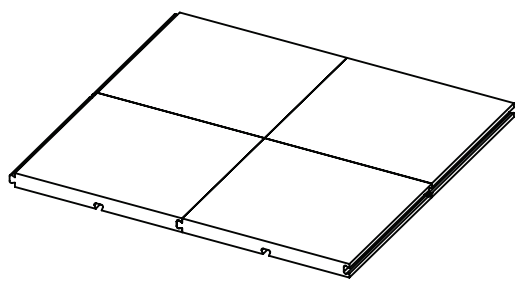

Right Side

10

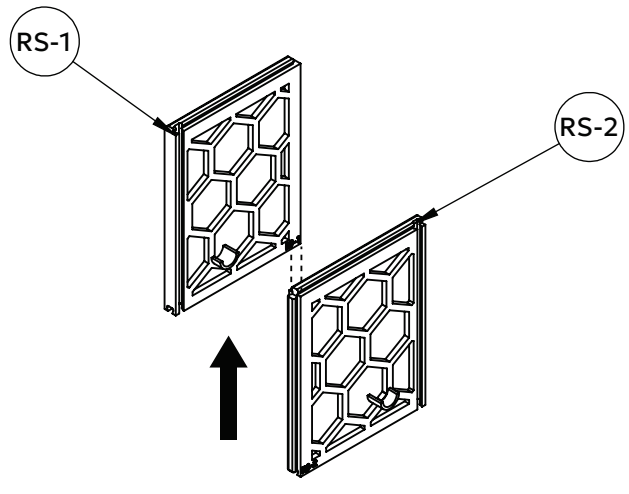

11

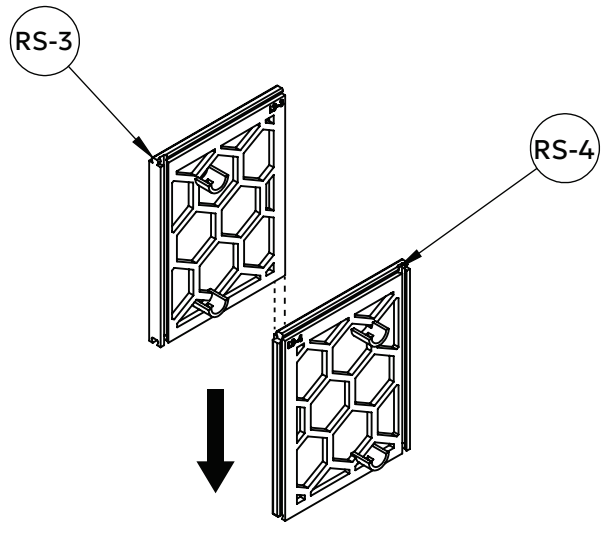

12

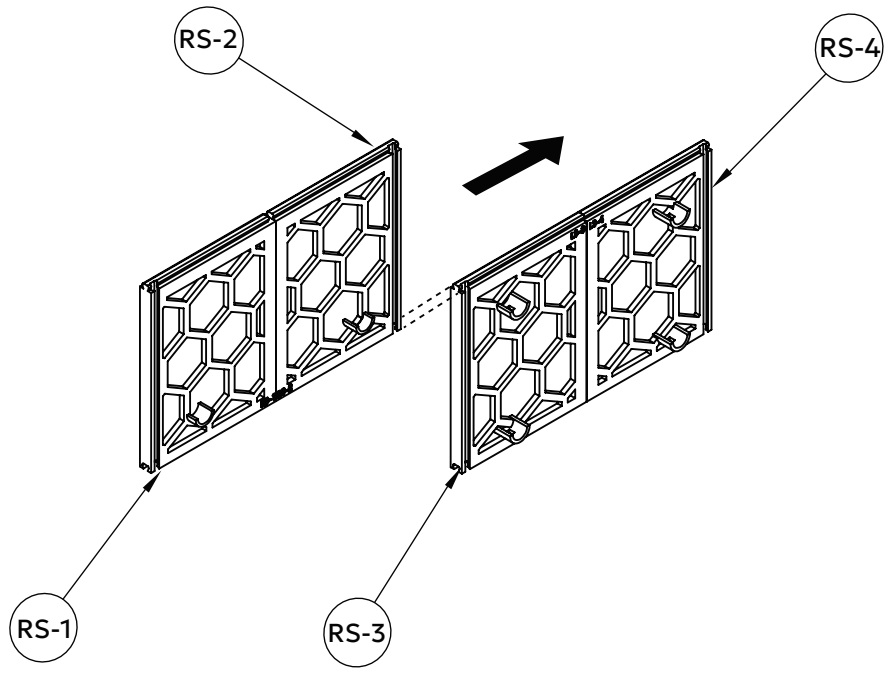

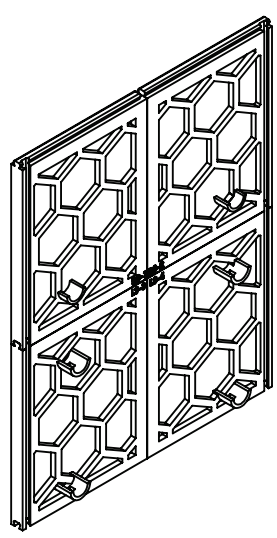

Left Side

13

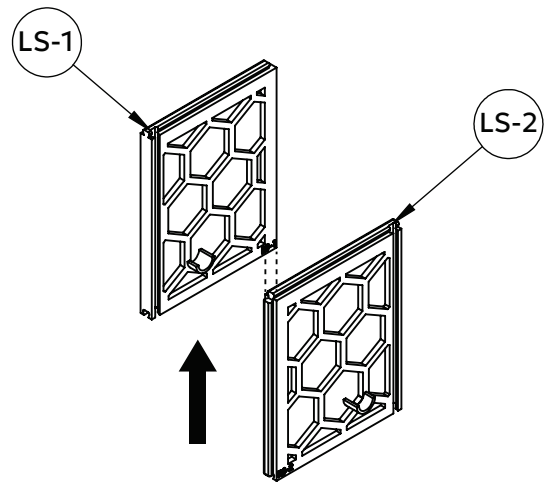

14

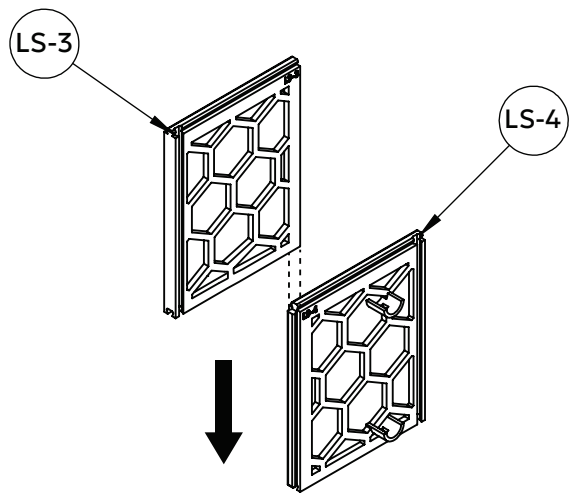

15

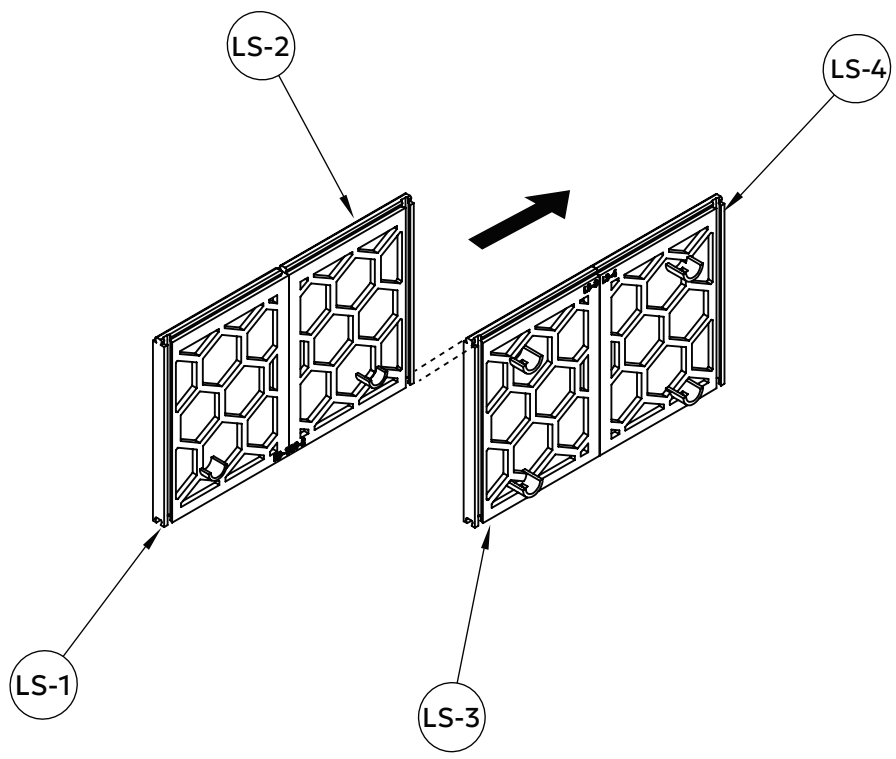

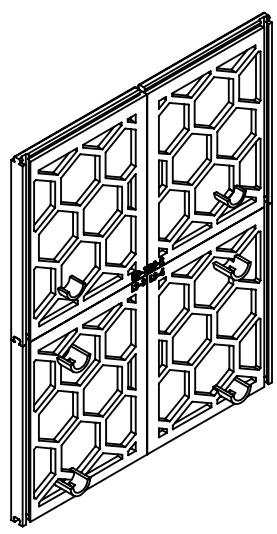

16

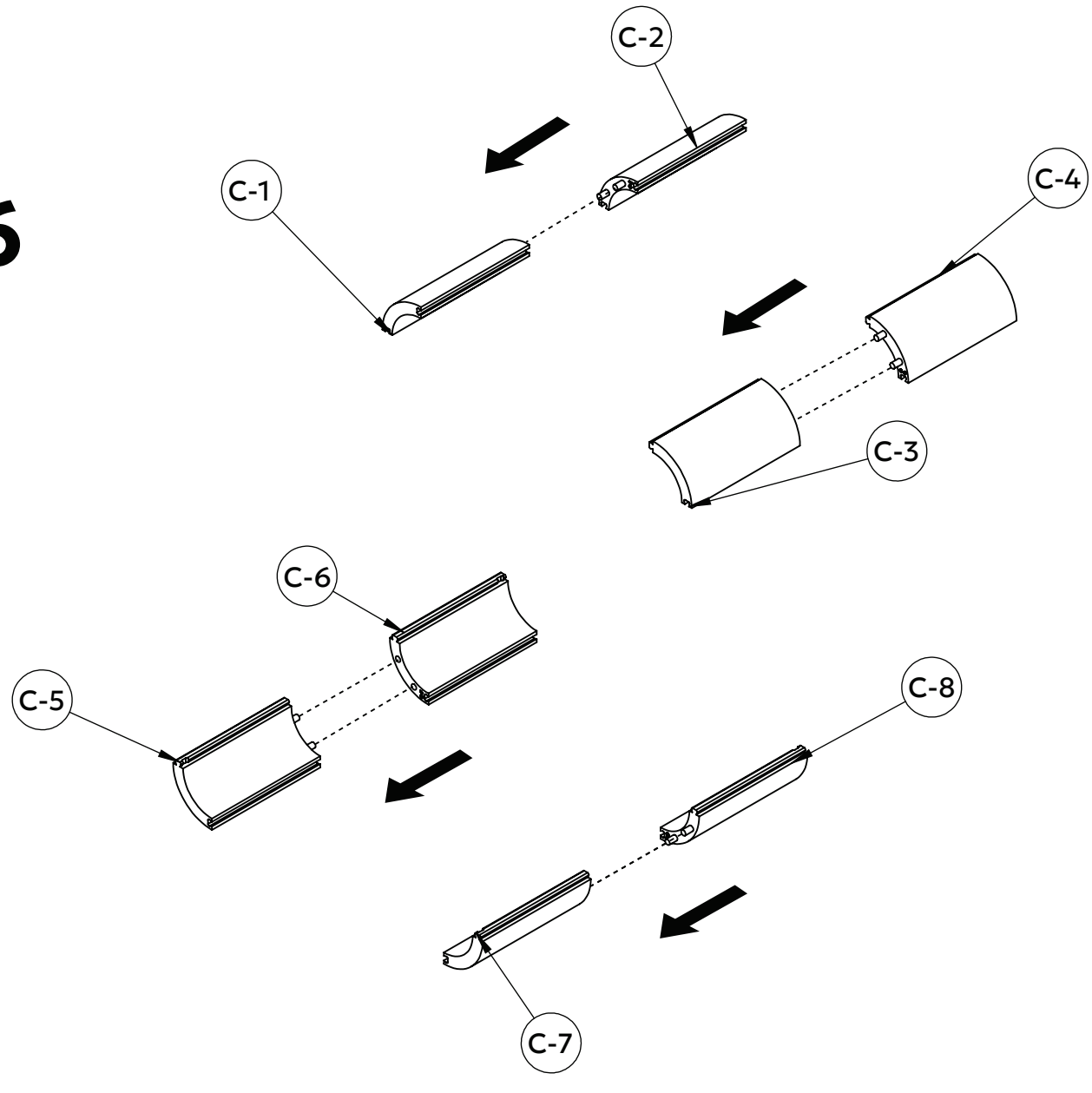

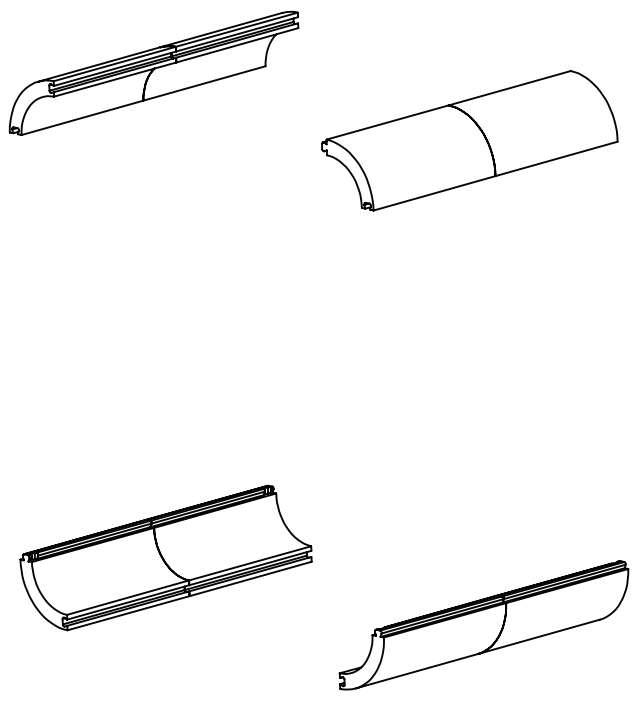

Door mount

17

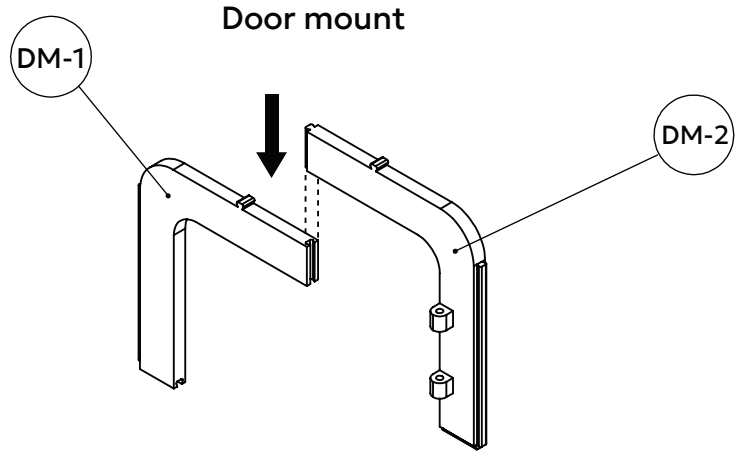

18

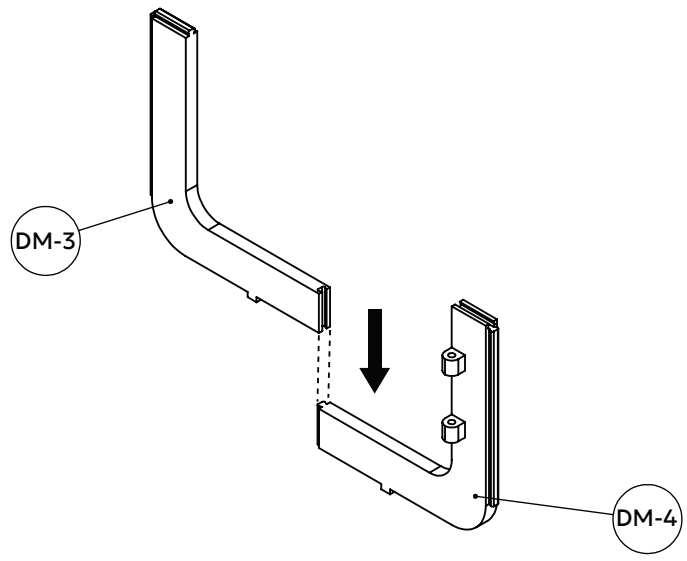

19

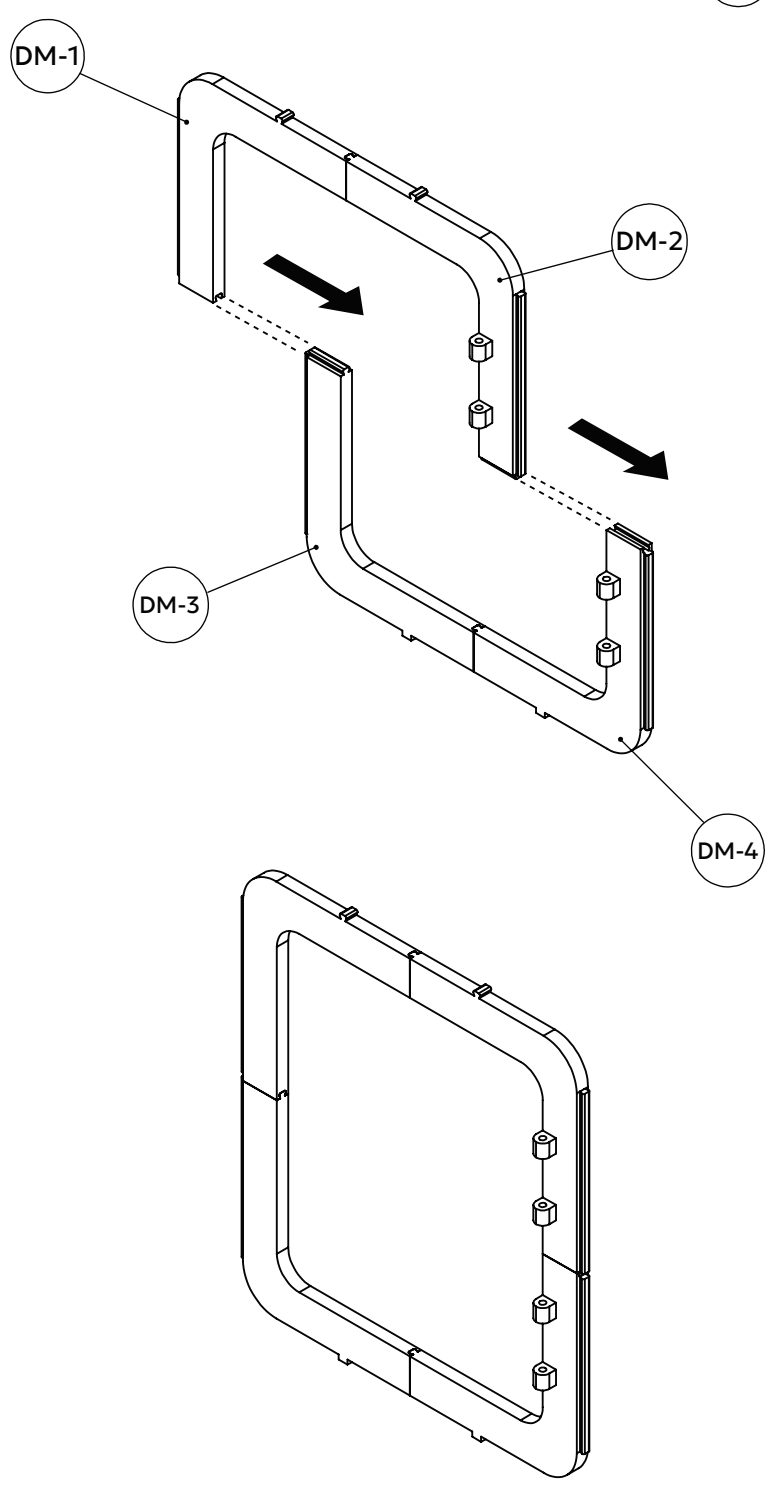

Door

20

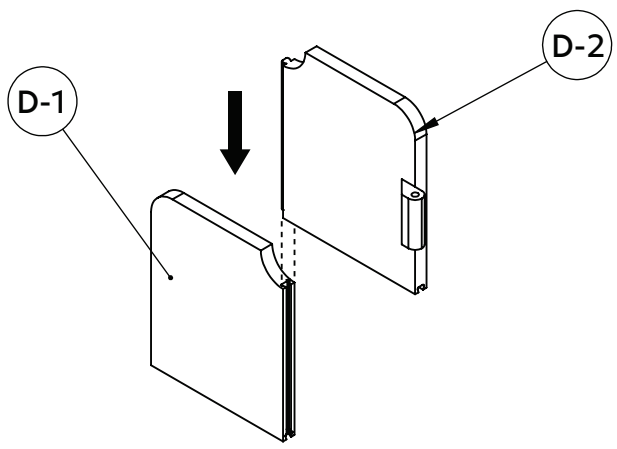

21

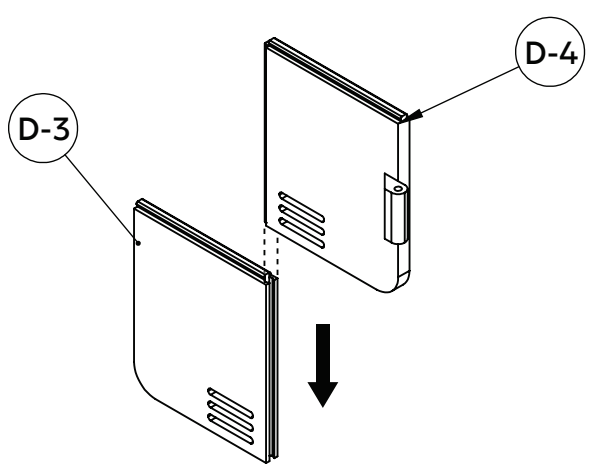

22

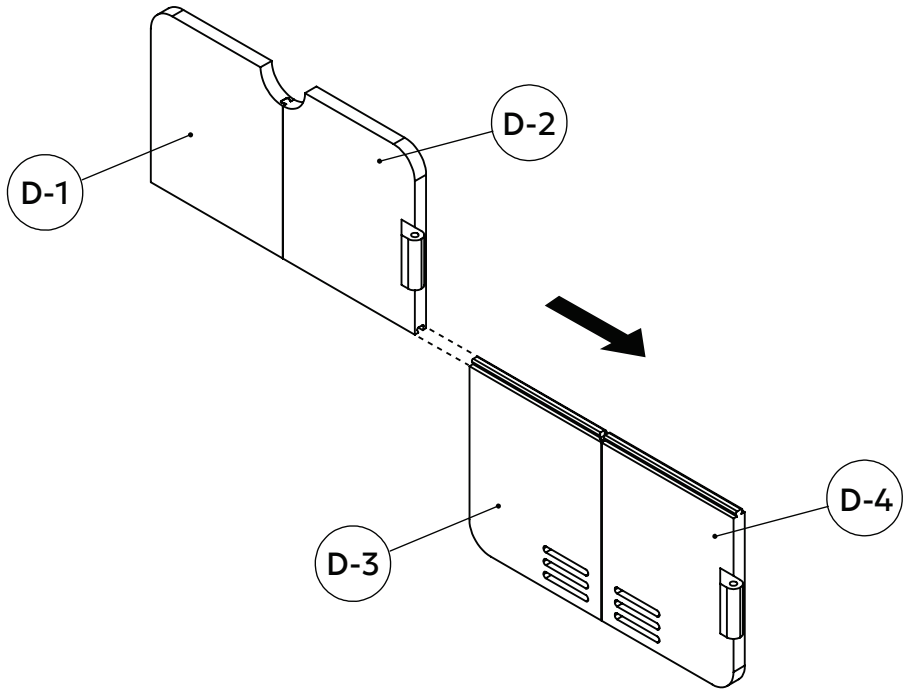

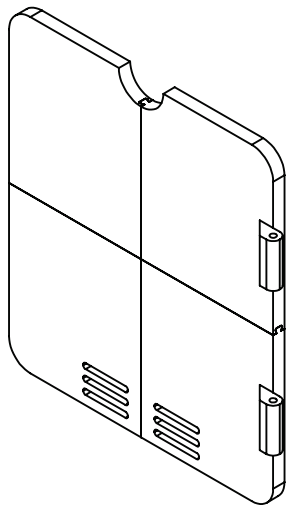

Shelve

23

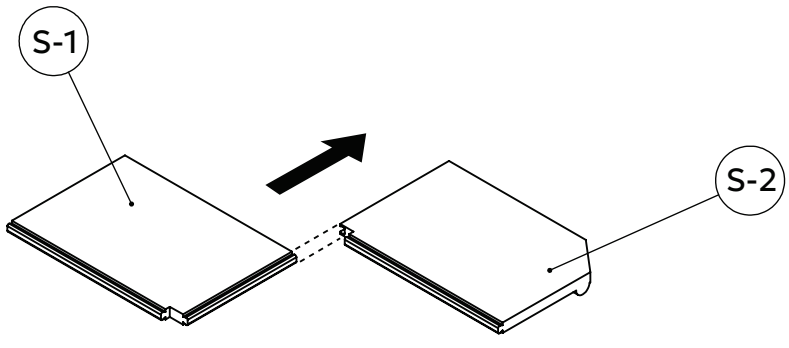

24

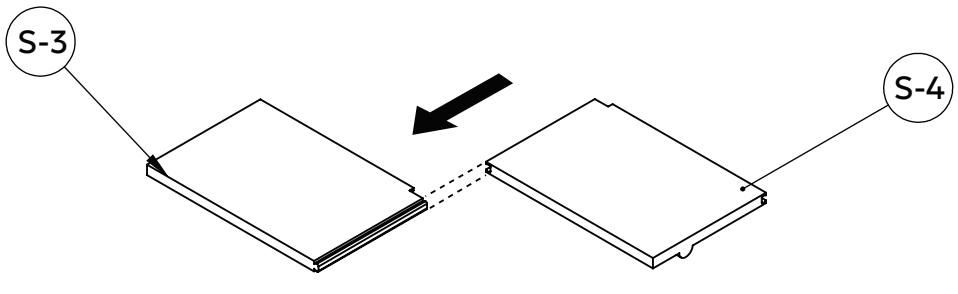

25

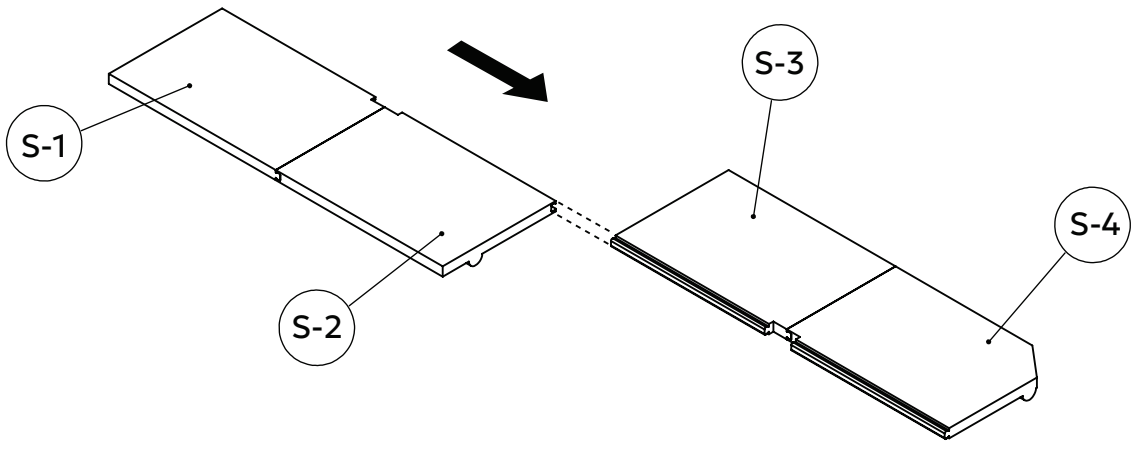

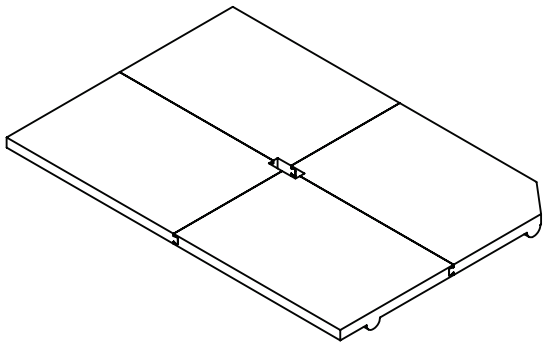

26

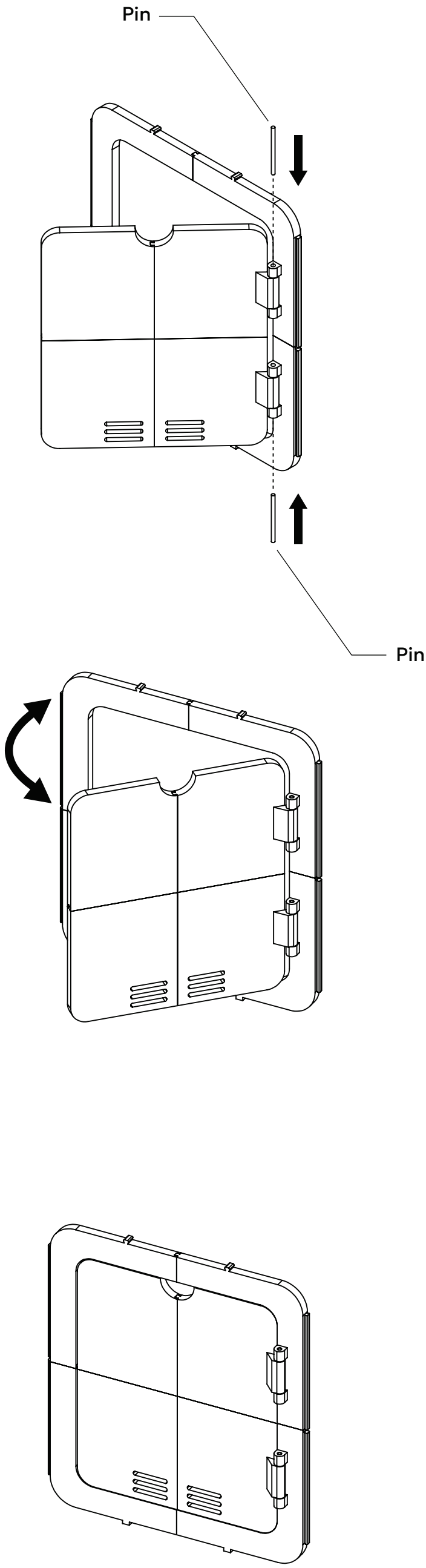

27

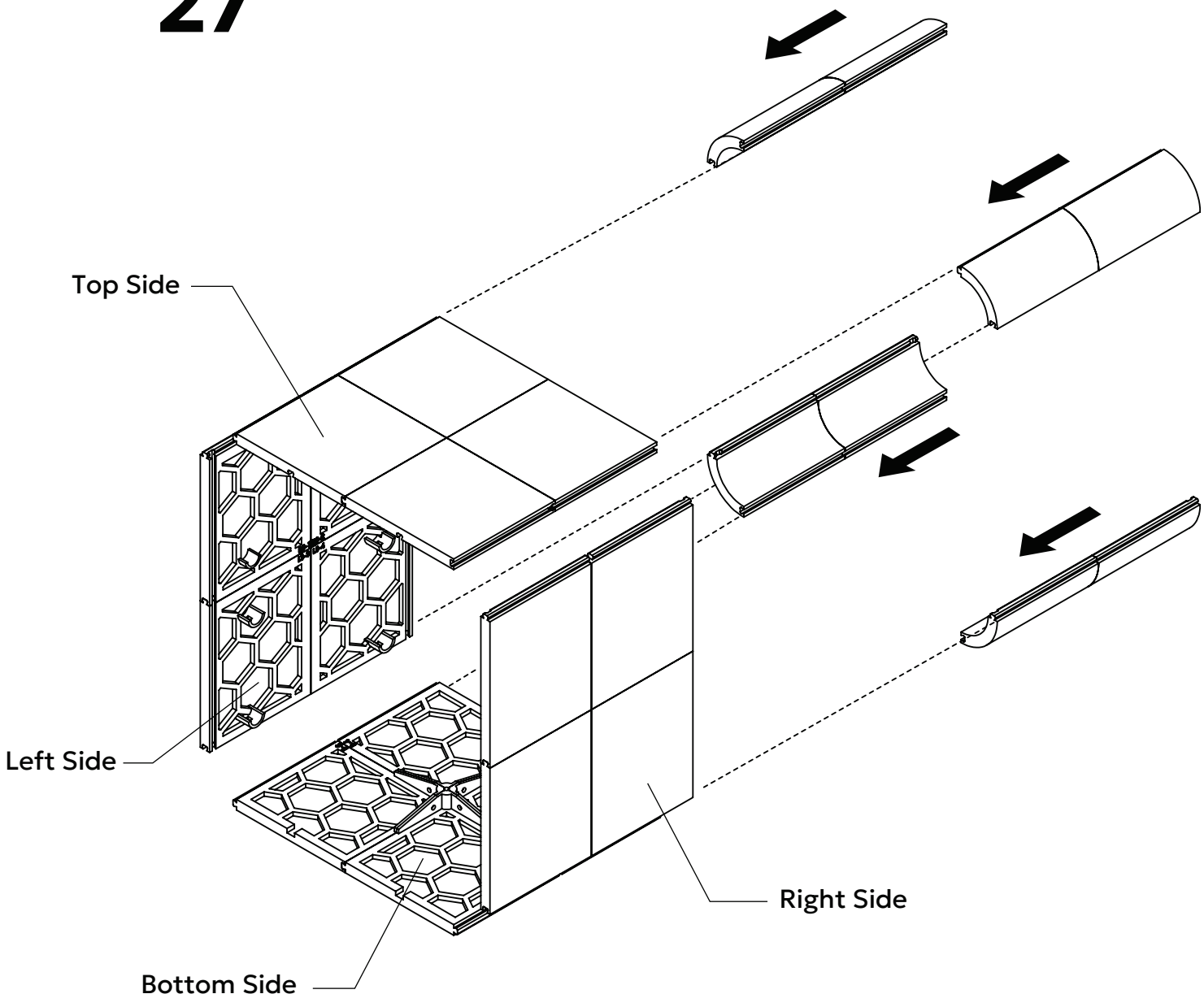

28

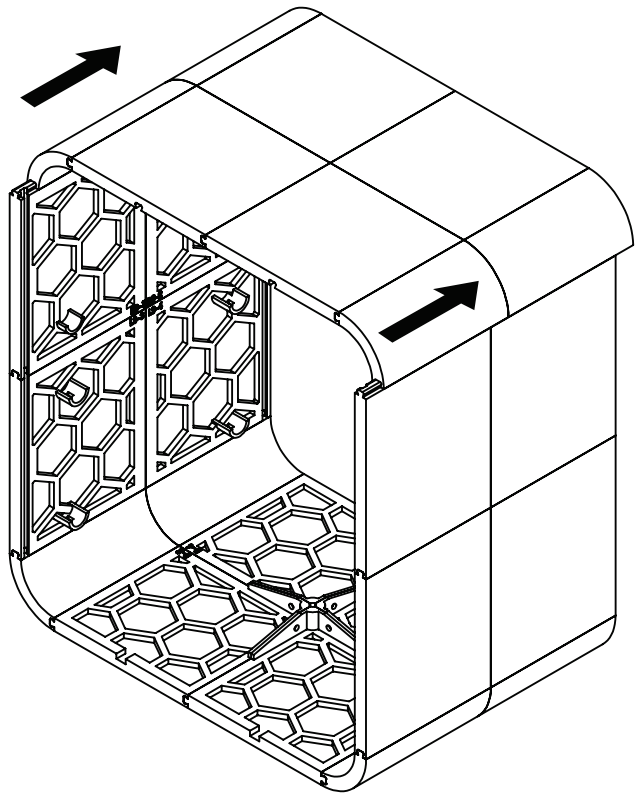

29

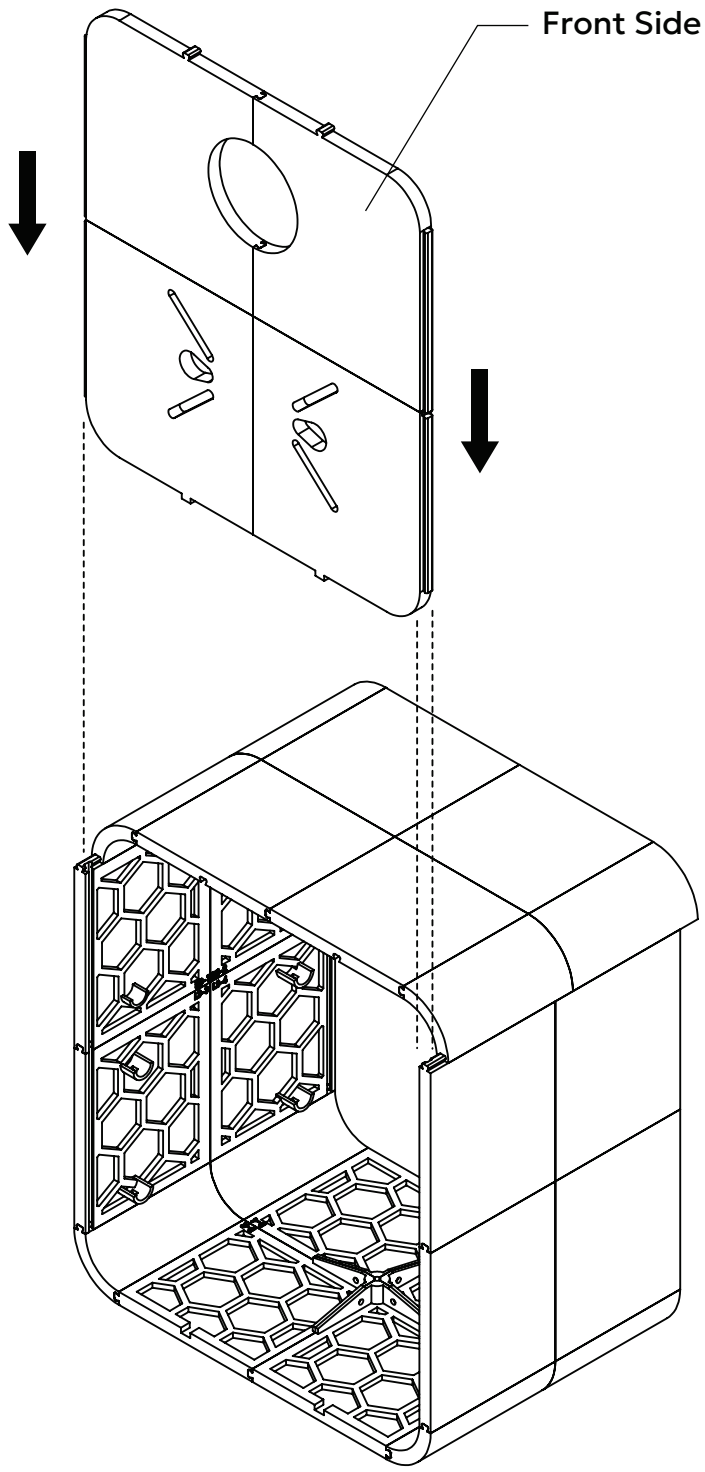

30

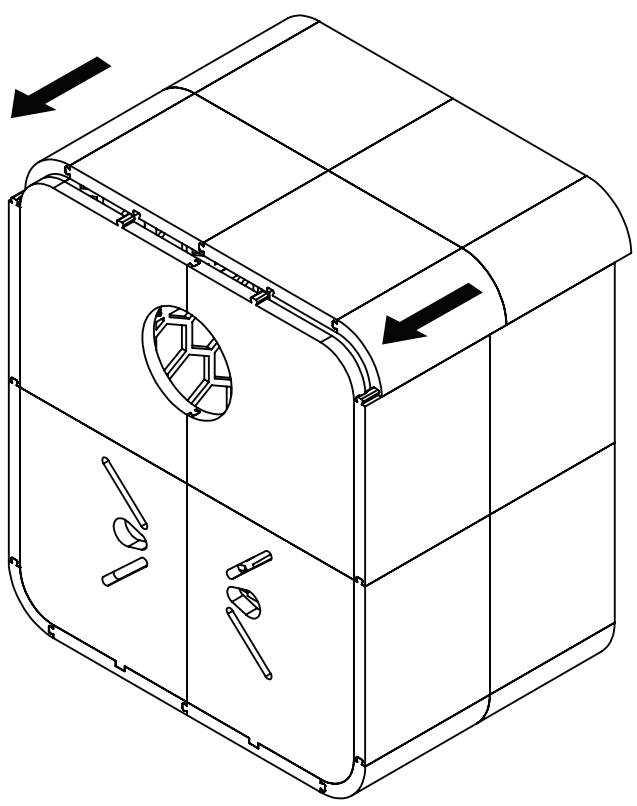

31

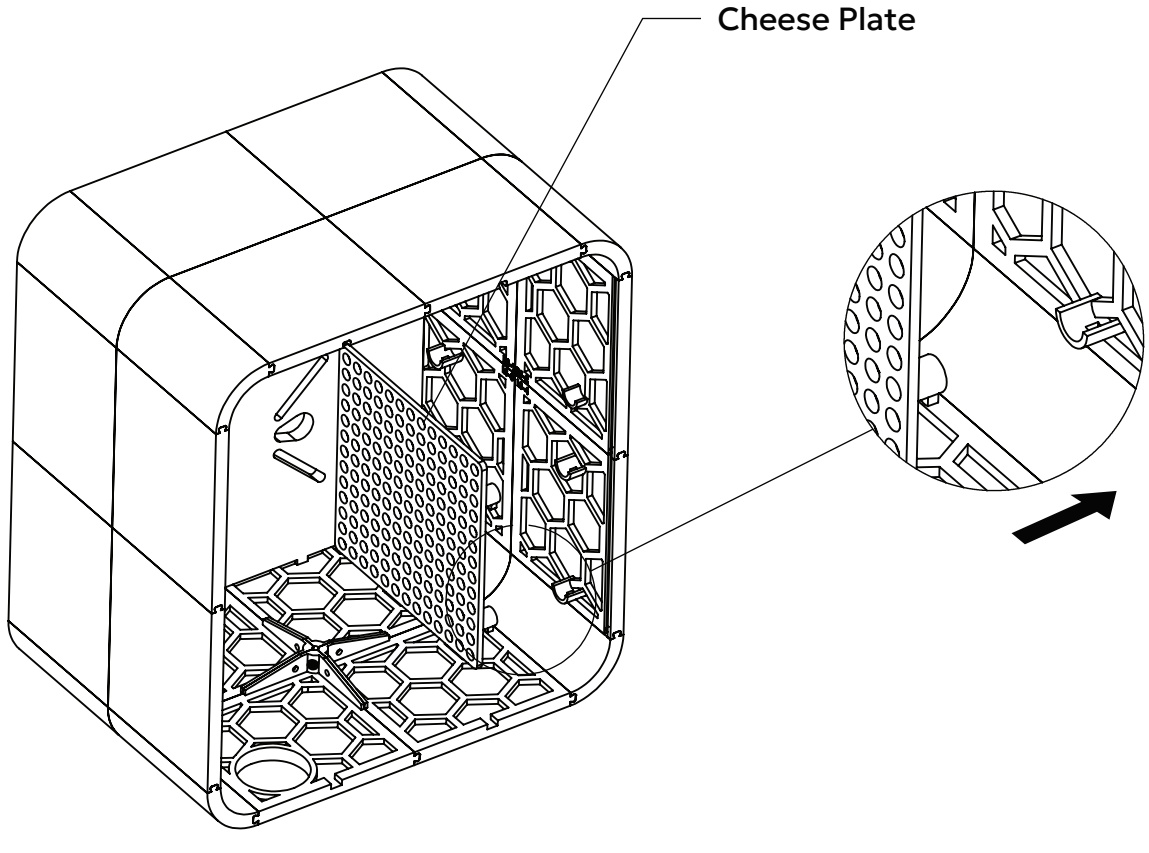

32

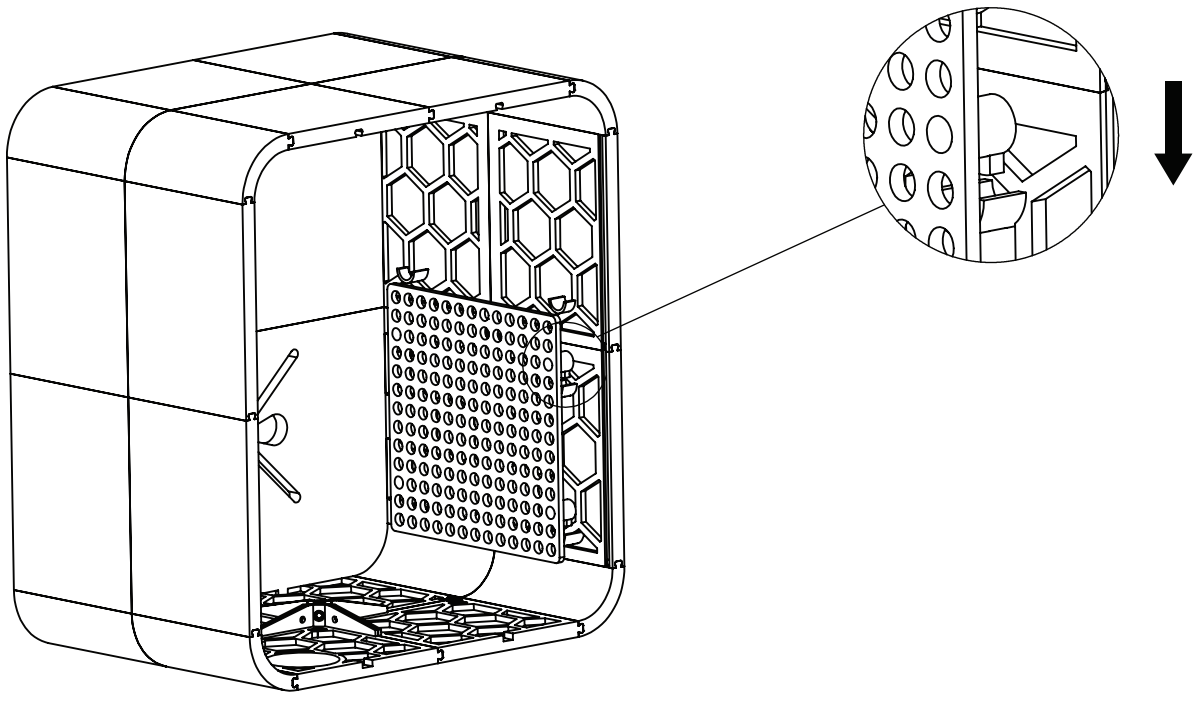

33

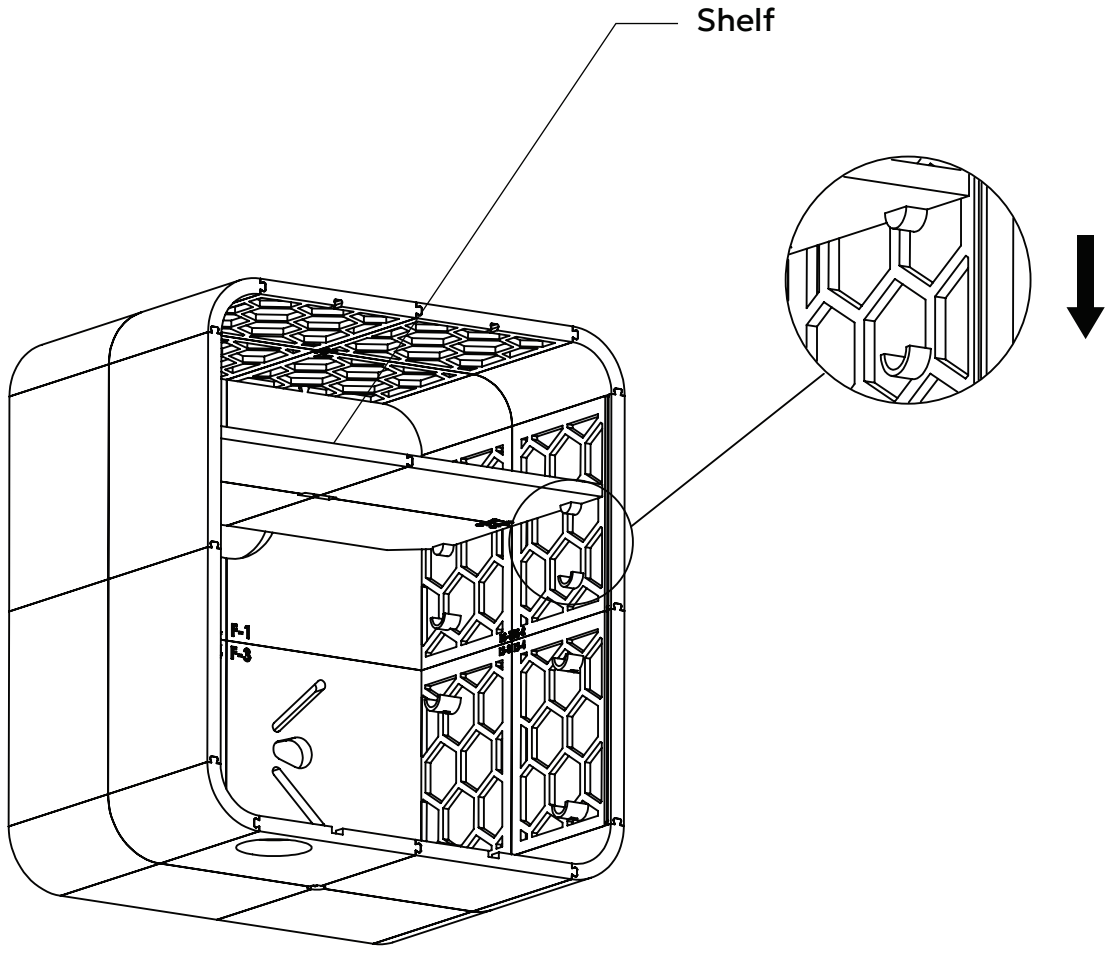

34

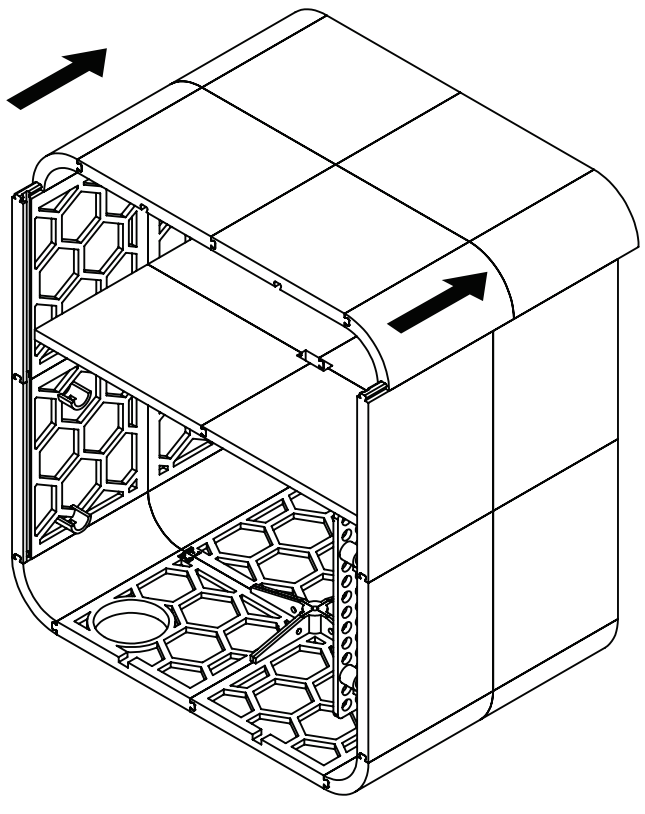

35

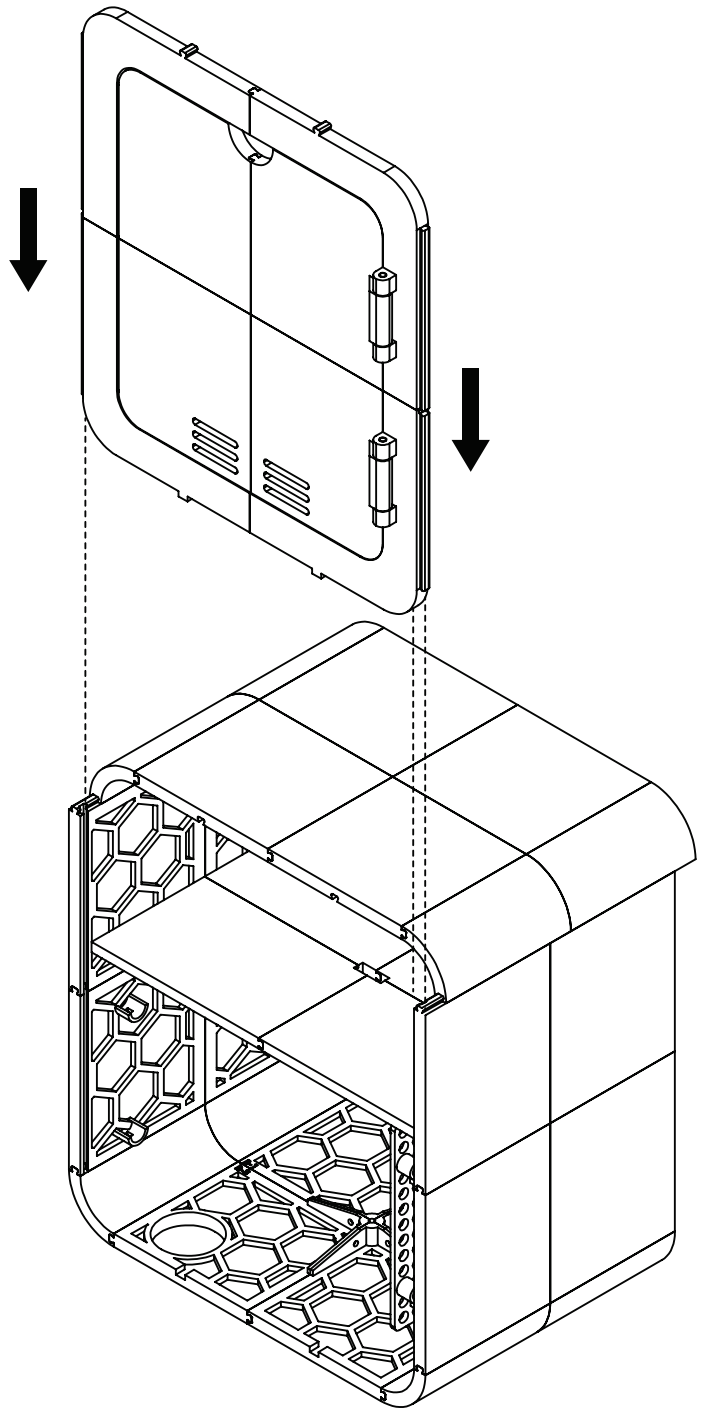
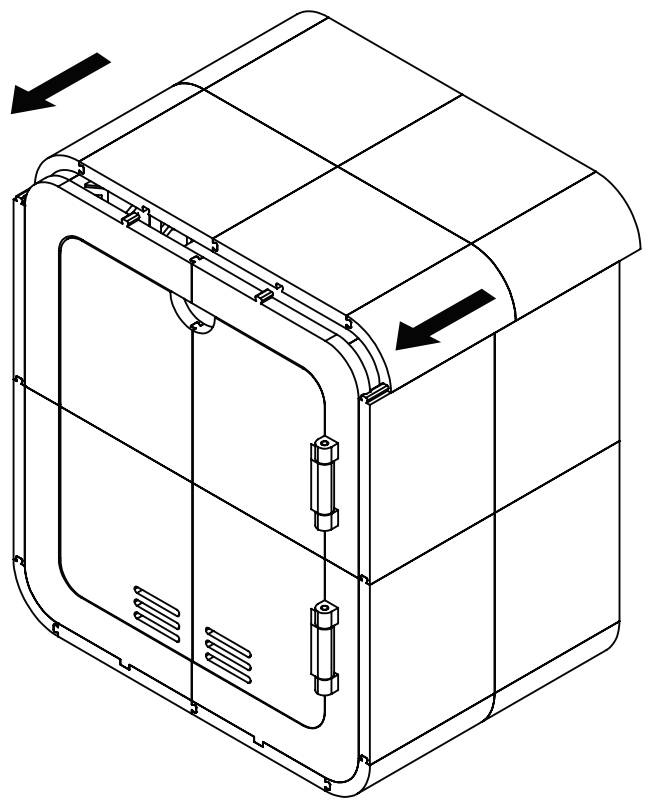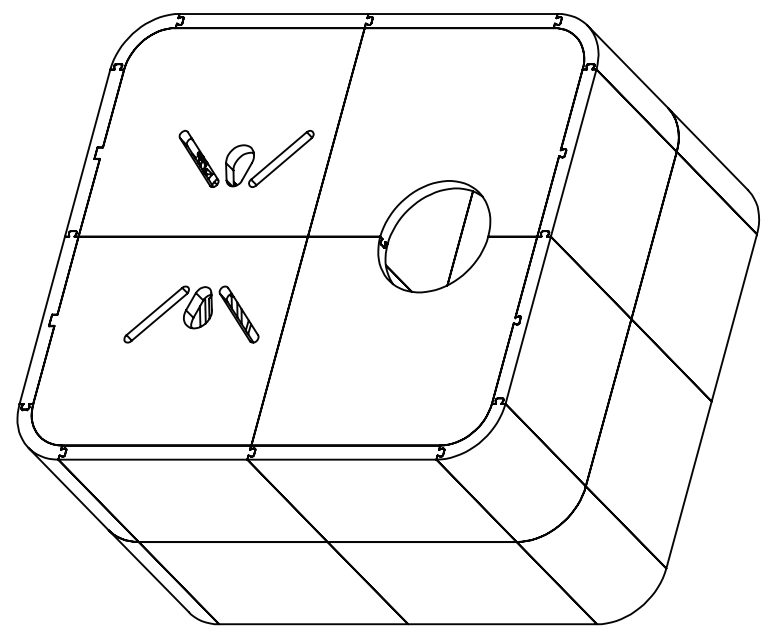
36